NI-Resist Iron Wedge Gate Valves

Figure 1671

200 CWP • Outside Screw & Yoke • Flanged Ends

Features

- Compact Design
- Steel U-Bolt Clamp
- 18-8 SMO Seat Rings
- 18-8 SMO Disc
- Stainless Steel Stem
- Body and Bonnet ASTM A436 Type II Ni-Resist
- ANSI/ASME B16.1
- Every valve is individually air tested

For more detailed features, refer to page 6.

Figure 1671

Flanged - Stainless Steel Trim

Size Range:

2 through 3 inches

Working Pressure Non-Shock

2" 200 psi Cold Working Pressure

2 1/2"-3" 175 psi Cold Working Pressure

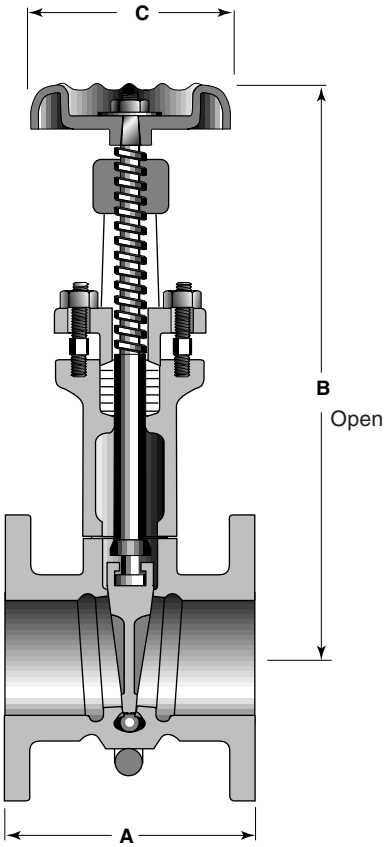

Principal Parts & Materials

Fig. No.	Size	Stem	Seating	End Conn.
1671	2" - 3"	Stainless Steel	18-8 SMO	Flanged

Dimensions and Weights

Inches (millimeters) - pounds (kilograms)

Valves	2 (50)	2 1/2 (65)	3 (80)
A	4.25 (108)	4.94 (125)	5.06 (129)
B	14.50 (368)	16.50 (419)	19.02 (483)
C	4.06 (103)	4.75 (121)	6.00 (152)
Wt.	20 (9.07)	32 (14.51)	41 (18.59)